Design Process Planning and Management

LAB EX-05: 2D Milling

Dr. K. Anandavel
Anandavel.k@vit.ac.in
anandavelvit@gmail.com

Room: 313-A43, SJT

Name: **SUJAL SRIVASTAVA**
Reg. no.: **20BME0699**

EX05: 2D MILLING

Target Date: 11.59 PM on 22 Feb

AIM

Develop a process and tool plan, generate tool path and part programming for a milling machine, and process set up sheet for the given job shown in the fig.1.,

Tool: Fusion 360

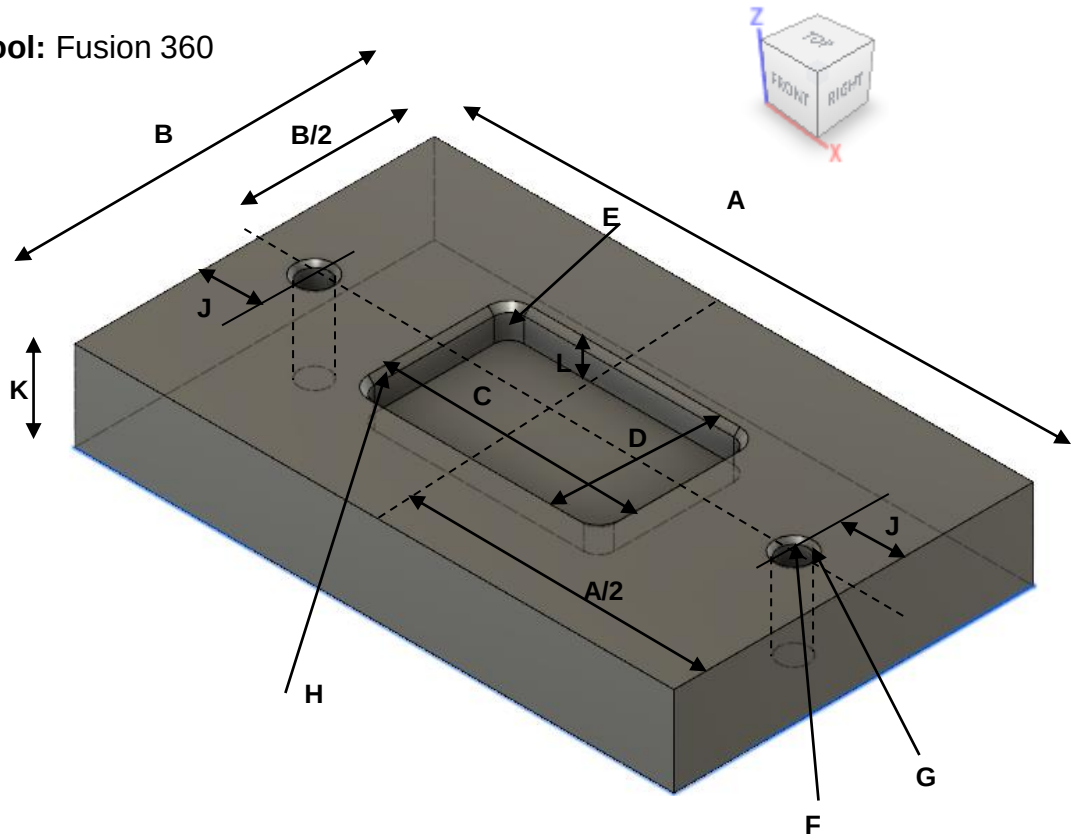

Parameter	Details	Remarks
A	200 mm	-
B	120 mm	-
C	80 mm	-
D	50 mm	-
E	5 mm	Fillet radius
F	10 mm dia	2 Through Holes
G	1 mm X 1 mm	Chamfering
H	1.5 mm X 1.5 mm	Chamfering
J	25 mm	
K	30 mm	
L	10 mm	Pocket depth

Please email to anandavel.k@vit.ac.in for any clarification or missing data or suggestion

EX05: 2D MILLING

Material given:

MS block 206 mm x 126 mm x 32 mm

One of the surface 206 mm x 106 mm is already machined

Procedure

1. Create geometric model of finished size (Fusion 360) to the given dimensions in Fig.1
2. Save model EX05_ Roll No_GM
3. Study the model and material given and identify the sequence of operation and fill in Table 1.
4. Identify the required tools and its size. Fill it in Table 1
5. Enter into Manufacture model in Fusion 360
6. Completed the manufacturing setup
7. Define each of the identified process in sequence with the required tools, and machining parameters
8. Simulate and visualize the each of the process to ensure the correct process, tools and other parameters defined properly to carryout the each operation without any warning and error. Also optimise the tool path.
9. Save the model with EX04_ Roll No_MM
10. Post process and get the NC codes individually for all the operations (with programme numbers like 1001, 2001, 3001, 4001, 5001….) and one consolidation of all operations (Programme number 10001)
11. Generate the Setup sheet, to give an overview of NC program to the operator.
12. Save the manufacturing model
13. Complete the experiment report
14. Upload the report programme files and set up sheet in FUSION 360- Under your folder under EX04
15. Keep all the files safely to upload the same in VTOP when you receive communication later for upload

EX05: 2D MILLING

Table 1: Process and Tool Plan

Process Sequence No.	Process Name	Tool	Tool Details	Part programming file Number	
1	Facing	50mm face mill	Type: face mill Diameter: 50mm Length: 50mm Flutes: 4		
2	2D Contour	10mm flat end mill	Type: flat end mill Diameter: 10mm Length: 50mm Flutes: 3		
3	2D pocket	10mm flat end mill	Type: flat end mill Diameter: 10mm Length: 50mm Flutes: 3		
4	Drill	10mm flat end mill	Type: flat end mill Diameter: 10mm Length: 50mm Flutes: 3		
5	2D contour	10mm chamfer mill	Type: chamfer mill Diameter: 10mm Taper Angle: 45° Length: 30mm Flutes: 3		

EX05: 2D MILLING

Fig. 1: Tool Path for Operation 1: Facing

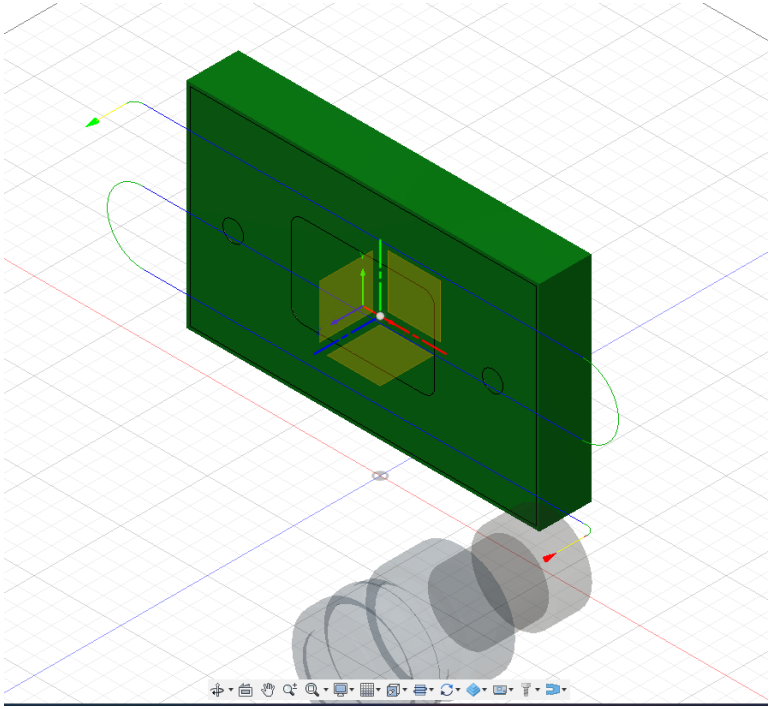

View 1

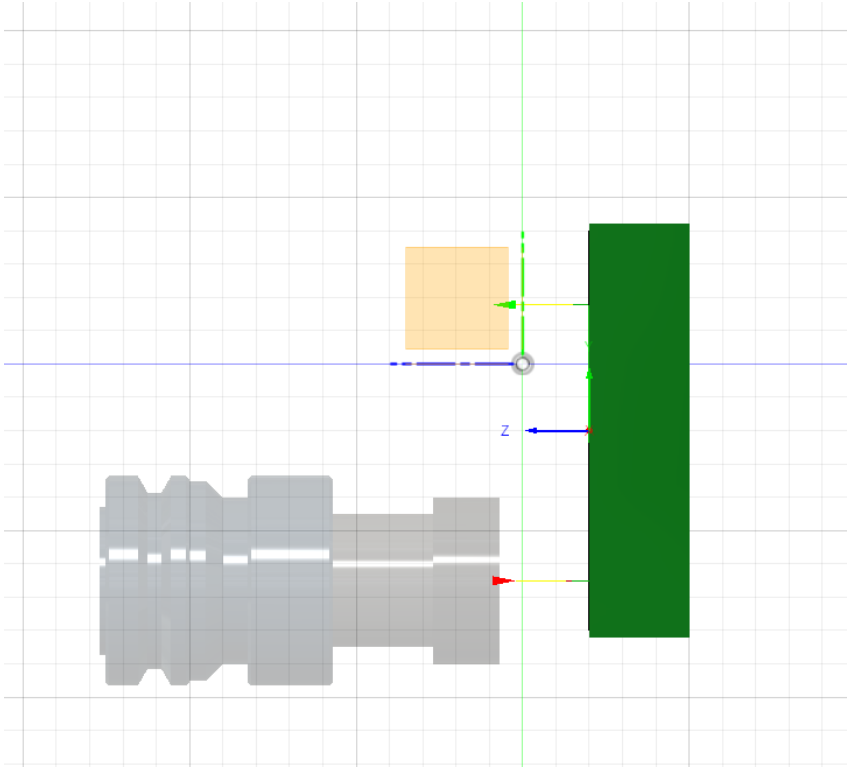

View 2

Fig. 2: Tool Path for Operation 2: 2D contour

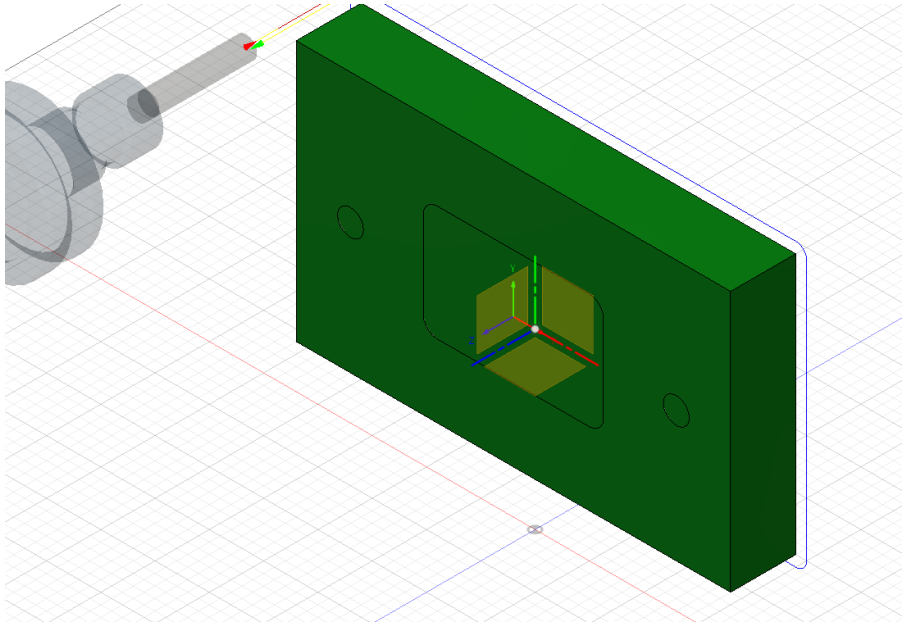

View 1

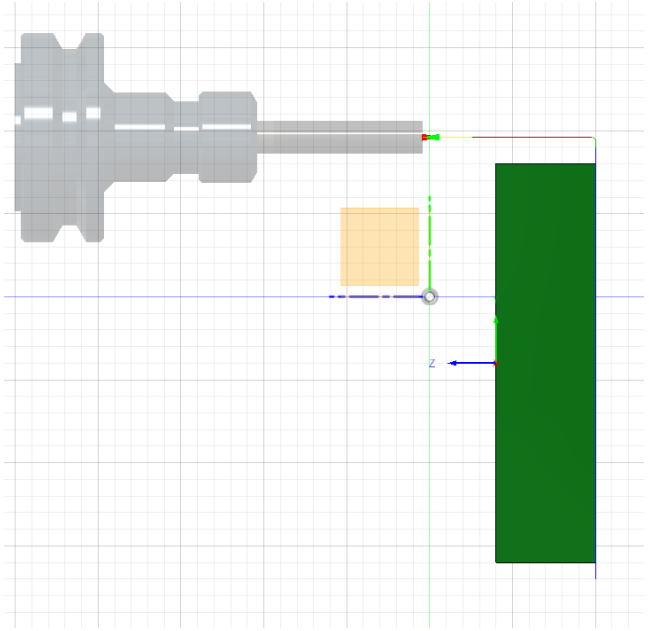

View 2

Fig. N: Tool Path for Operation 3: Pocketing

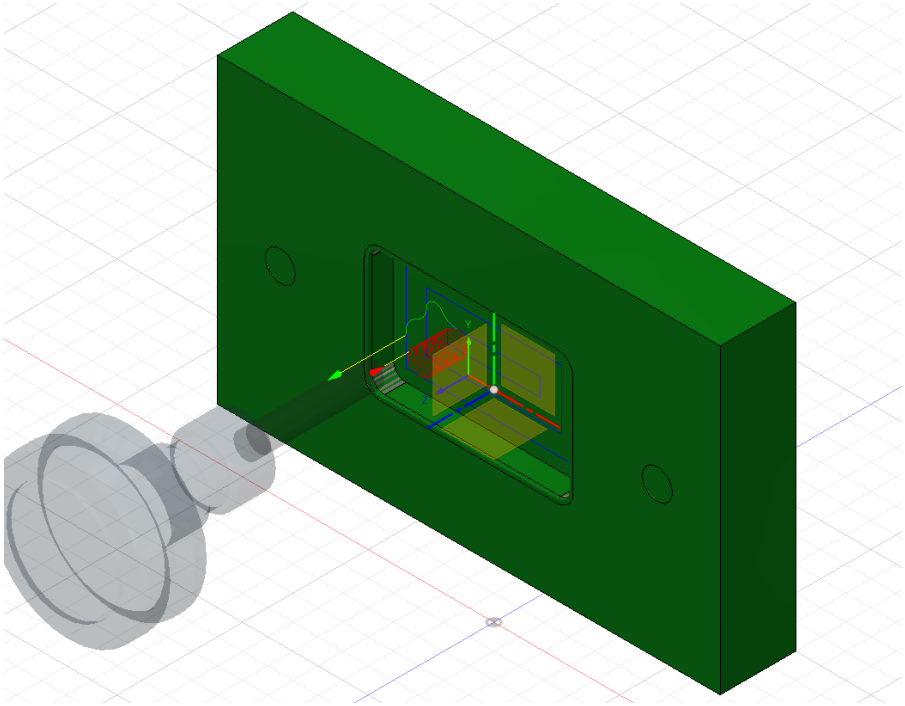

View 1

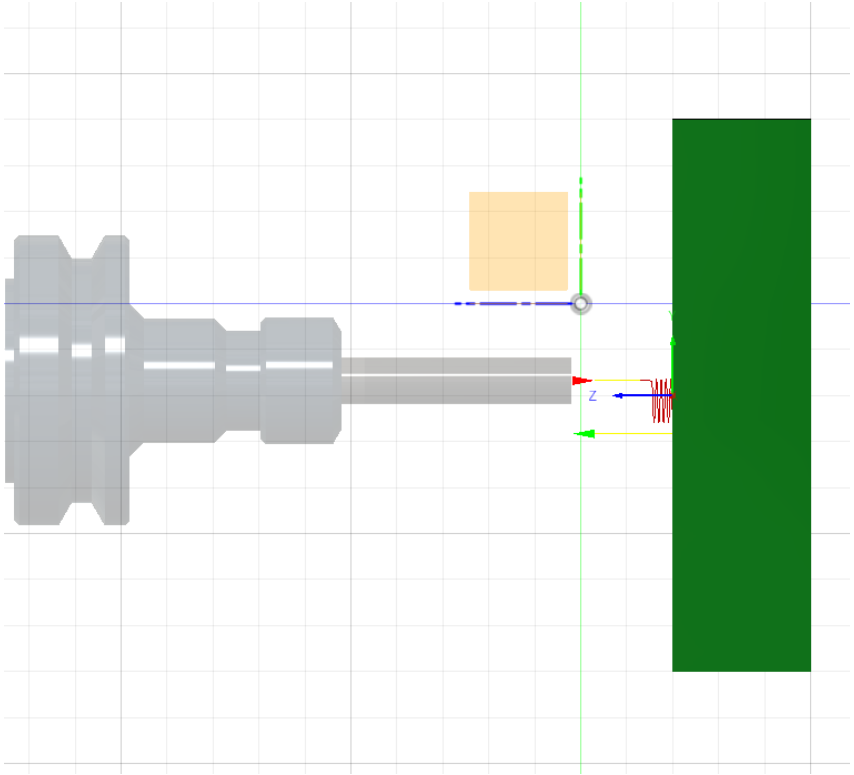

View 2

EX05: 2D MILLING

Inference and Conclusion

1. a) Machining time for operation 1: Facing is 01:59 sec.
   b) Machining distance for operation 1: Facing is 0.944 m.

2. a) Machining time for operation 1: 2D contour is 01:11 sec.
   b) Machining distance for operation 1: 2D contour is 0.772 m.

3. a) Machining time for operation 1: 2D pocketing is 01:39 sec.
   b) Machining distance for operation 1: 2D pocketing is 0.948 m.

4. a) Machining time for operation 1: Drill is 00:23 sec.
   b) Machining distance for operation 1: Drill is 0.322 m.

5. a) Machining time for operation 1: 2D contour is 00:21 sec.
   b) Machining distance for operation 1: 2D contour is 0.266 m.

6. Total machining operation: 05:36 sec.
   total machine distance: 3.399 m.